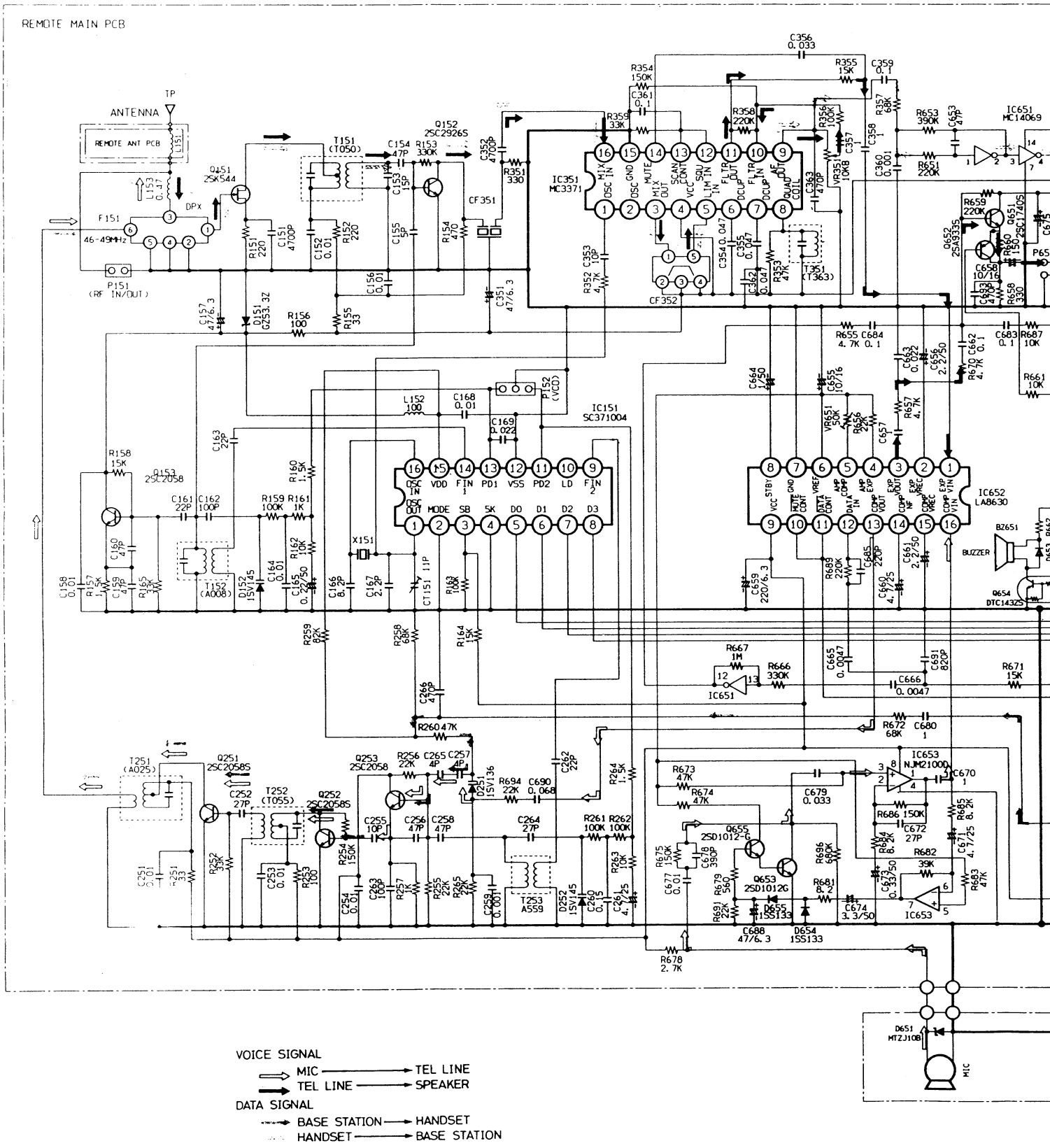SCHEMATIC DIAGRAM (HANDSET)