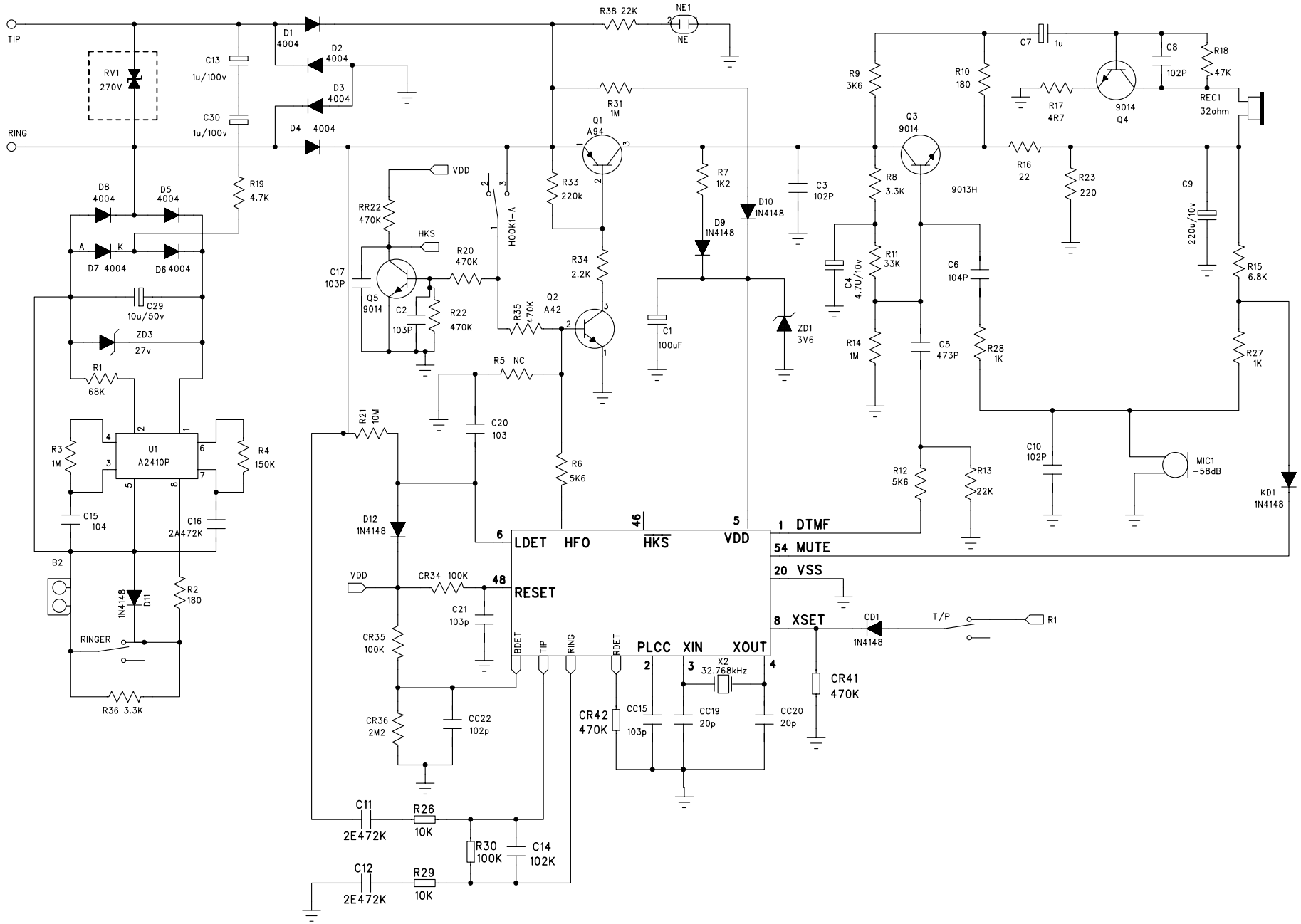
TIP
RING
RV1 270V
C13 1u/100v
C30 1u/100v
D1 4004
D2 4004
D3 4004
D4 4004
R38 22K
NE1
NE
R31 1M
Q1 A94
R33 220k
R34 2.2K
Q2 A42
R35 470K
R7 1K2
D9 1N4148
D10 1N4148
C3 102P
C1 100uF
ZD1 3V6
R9 3K6
R10 180
Q3 9014
9013H
R8 3.3K
R11 33K
R14 1M
C4 4.7U/10v
C5 473P
R12 5K6
R13 22K
C7 1u
R17 4R7
9014 Q4
C8 102P
R18 47K
REC1 32ohm
R16 22
R23 220
C9 220u/10v
C6 104P
R28 1K
R15 6.8K
R27 1K
C10 102P
MIC1 -58dB
KD1 1N4148
R19 4.7K
D8 4004
D5 4004
D7 4004
D6 4004
C29 10u/50v
ZD3 27v
R1 68K
U1 A2410P
R3 1M
R4 150K
C15 104
C16 2A472K
B2
D11 1N4148
R2 180
RINGER
R36 3.3K
VDD
RR22 470K
HKS
C17 103P
Q5 9014
C2 103P
R22 470K
R20 470K
HOOK1-A
R5 NC
C20 103
R21 10M
R6 5K6
D12 1N4148
CR34 100K
C21 103p
CR35 100K
CR36 2M2
CC22 102p
C11 2E472K
R26 10K
R30 100K
C14 102K
C12 2E472K
R29 10K
LDET HFO HKS VDD
RESET
BDET TIP RING RDET
PLCC XIN XOUT
1 DTMF
54 MUTE
20 VSS
8 XSET
CD1 1N4148
T/P
R1
X2 32.768kHz
CR41 470K
CR42 470K
CC15 103p
CC19 20p
CC20 20p